AUTOPRIME

QC/P150-150mm
Enclosed Automatic Priming Pump

The SPP Autoprime QC/P150 - 150mm pump is a fully enclosed diesel driven pump unit with high efficiency, designed to pump most liquids including sewage and semi solids. The enclosure provides sound reduction and security for use in noise sensitive areas. Typical uses are removal of ground and rain water from excavations, trenches, footings, manholes and ponds etc. May also be used for stream and pipe diversions and flood water control, well point dewatering, pipe relining and sludge pumping.

DESIGN FEATURES

- Bunded unit on two wheel road trailer with fixed height towing eye or 50mm ball hitch.
- Alternative trailer for the QC/P150 - 150mm pump with variable height draw bar is available (adds 35 kg to weight)
- 12 volt battery starting by key switch.
- Pump will pass solids up to 65mm diameter and 80mm long.
- Reliable double mechanical seals which allow dry running.
- Pump can be left running when liquid is exhausted and will prime automatically when liquid is present.
- Rugged construction requires minimal operator maintenance.
- 65 cfm Vacuum Pump with coalescer and air filtered before exhaust to atmosphere.
- Features efficient 'Smartprime' technology for energy saving and reliability.

PUMP SPECIFICATIONS

Flow Rate	380 m^3/h Maximum
Discharge Head	25 m Maximum
Working Pressure	10 bar Maximum
Suction Hose Size	150 mm (6 in) Dia.
Discharge Hose Size	150 mm (6 in) Dia.
Max Solids Size	65 mm Diameter x 80 mm
Pump Casing	Cast Iron
Impeller	SG Iron
Pump Shaft	Stainless Steel
Wear Plates	SG Iron
Suction Sump	Cast Iron

Shaft Seal	Silicon Carbide/Silicon Carbide
Elastomer	Viton
Diesel Engine	CAT C1.5N or Perkins 403D
Starting	12 Volt Battery by Key Switch
Sound Pressure Level	65 dBA at 7 metres
Fuel Tank Capacity	220 litres
Full Load Consumption	4.9 litres per hour average
Full Load Running Time	45 hours
Chassis Options	Skid Mounted or Pod for Mounting
Weight - Wet	With Fixed Height Drawbar 1313kg

QI150rev03 Trailers

Specifications may be subject to change without notice.

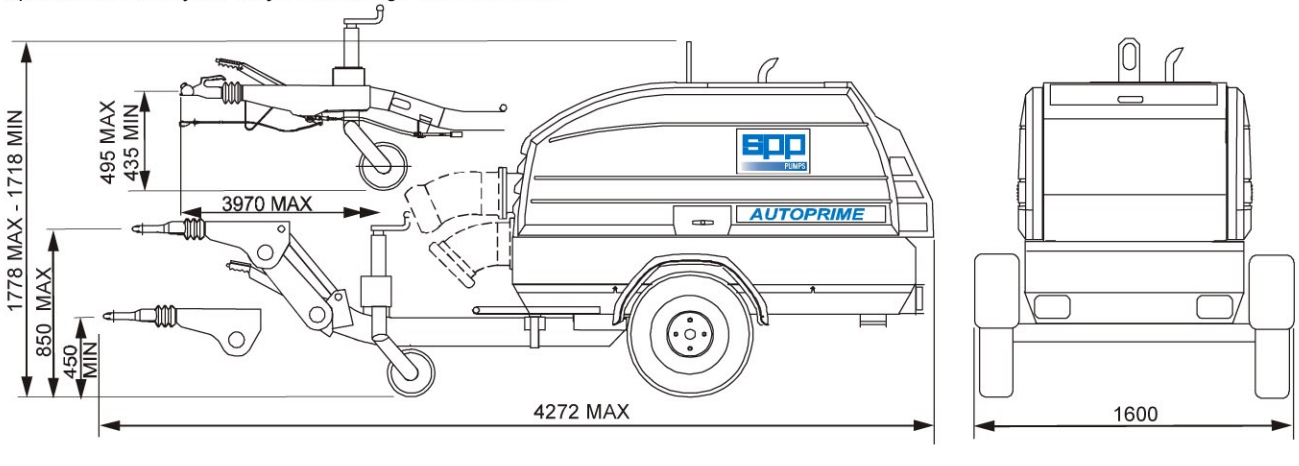

AUTOPRIME

AUTOPRIME
QC/P150 CAT C1.5N or Perkins 403D
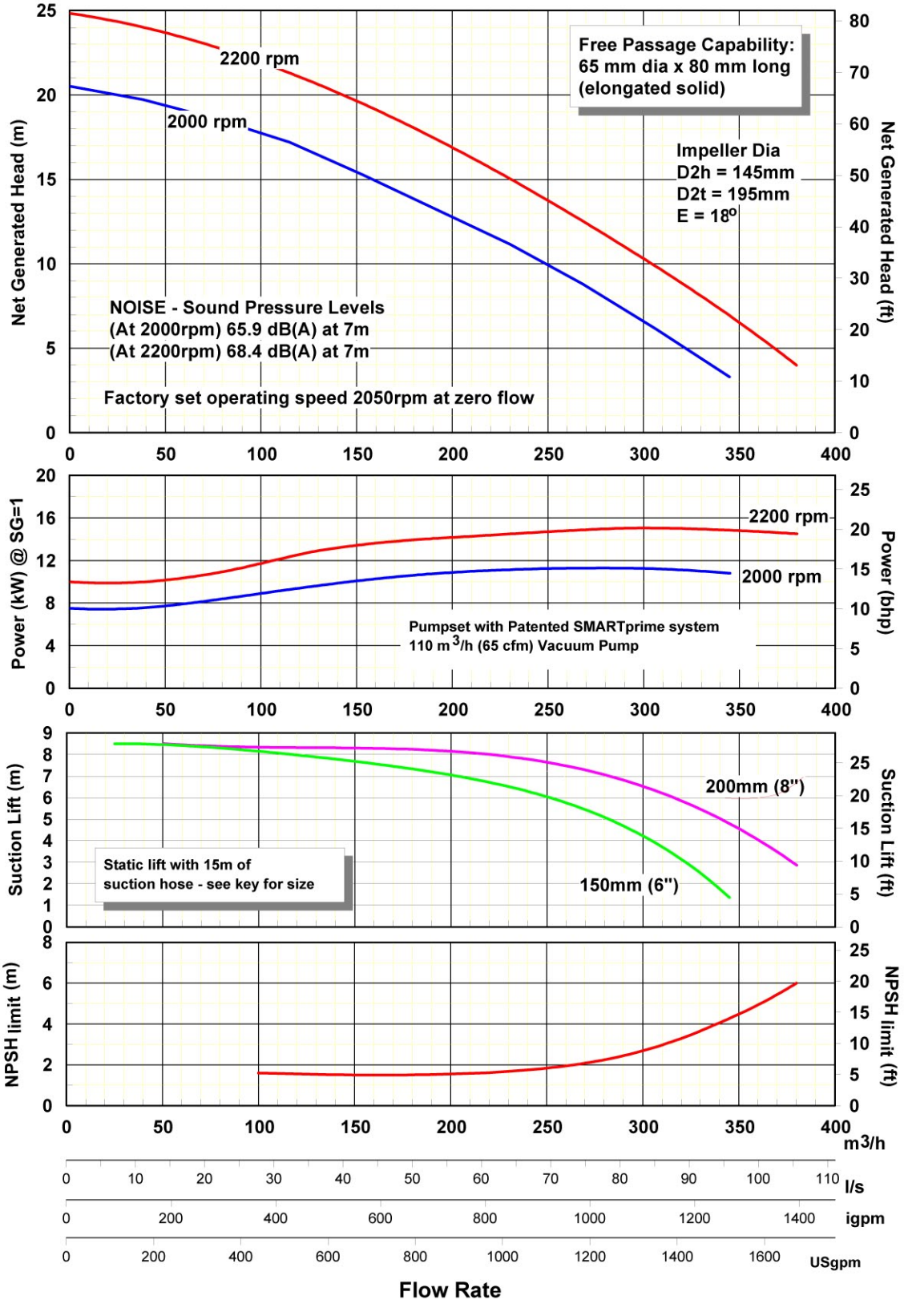
Curve Ref: QC/P150 C1.5N/403D
Speed: see below (rpm)
Suct x Disch: 150 x 150 mm